1883226
Montpellier Curio Cabinet

Parts and Hardware List

A.	Top	1 pc
B.	Right Side Panel	1 pc
C.	Left Side Panel	1 pc
D.	Bottom	1 pc
E.	Right Door	1 pc
F.	Left Door	1 pc
G.	Tassels	2 pcs
H.	Shelves	2 pcs
I.	Shelf Supports	8 pcs
J.	Back Panel	1 pc
K.	Legs	4 pcs
L.	Pan Head Screws	14 pcs
M.	Flat Head Screws	8 pcs
N.	Flat Head Screwdriver	1 pc
O.	Phillips Head Screwdriver	1 pc
P.	Allen Wrench	1 pc
Q.	Allen Head Bolts	4 pcs
R.	Lock Washers	4 pcs
S.	Flat Washers	4 pcs
T.	Connecting Bolts	4 pcs
U.	Eccentric Cams	4 pcs
V.	Plastic Caps	4 pcs

∗ Please make sure that you have all the parts and hardware indicated above before you begin assembly of this item.
∗ Use the hardware illustrations to determine correct piece and size.
∗ This item should be assembled on a soft surface to prevent scratching the finish during assembly.
∗ This item may require periodic tightening.

1883226
Montpellier Curio Cabinet

Hardware Illustrations

L. Pan Head Screw

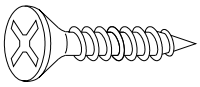

M. Flat Head Screw

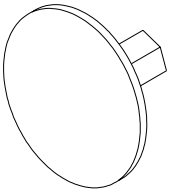

V. Plastic Cap

T. Connecting Bolt

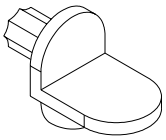

I. Shelf Support

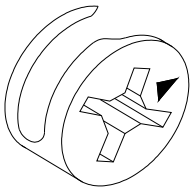

U. Eccentric Cam

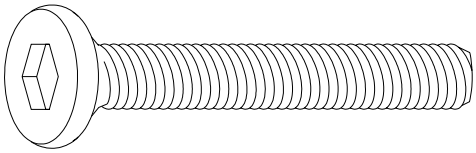

Q. Allen Head Bolt

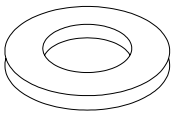

S. Flat Washer

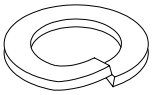

R. Lock Washer

1883226
Montpellier Curio Cabinet

Attach Legs

Parts required

D.	Bottom	1 pc	Q.	Allen Head Bolts	4 pcs
K.	Legs	4 pcs	R.	Lock Washers	4 pcs
P.	Allen Wrench	1 pc	S.	Flat Washers	4 pcs

1. **Attach Legs (K)** Align the pre-drilled holes in the corner blocks between aprons of the Bottom (D) with pre-threaded holes in the Legs (K). Secure with Allen Head Bolts (Q), Lock Washers (R) and Flat Washers (S) by using Allen Wrench (P). See Illustration #1.

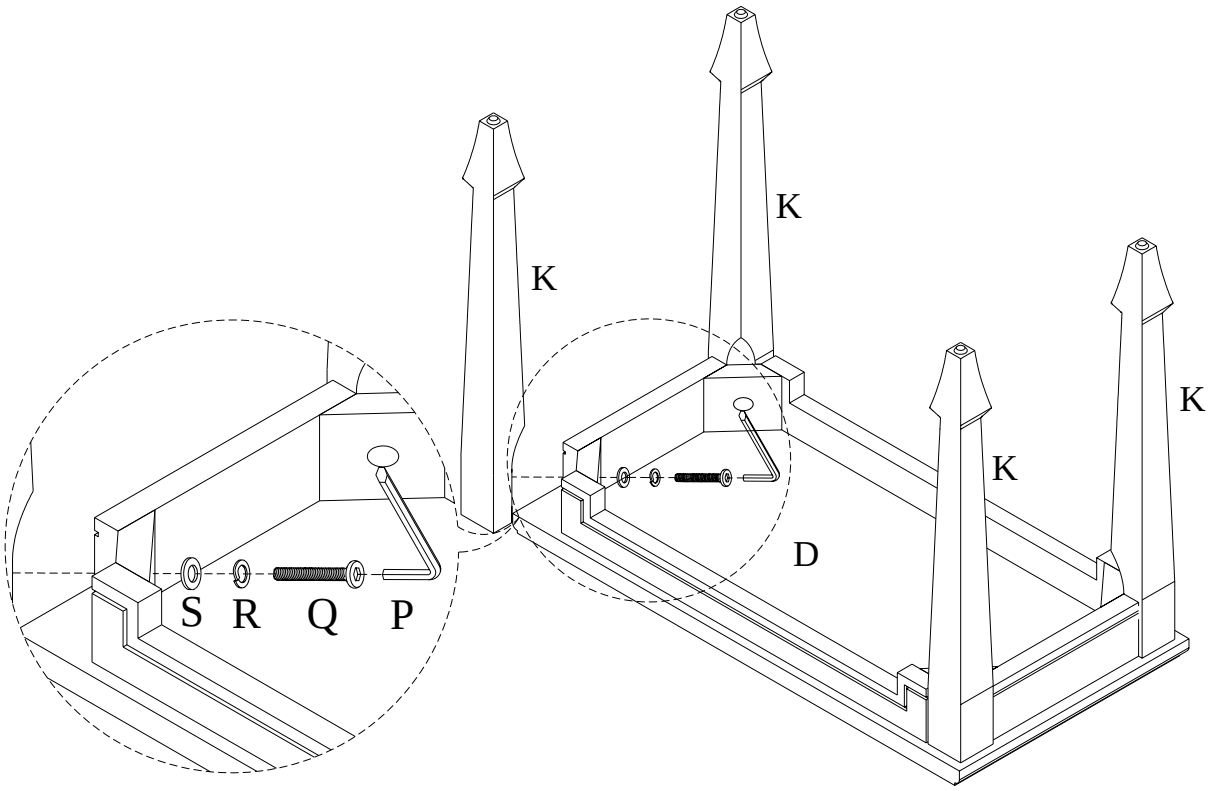

Illustration #1

1883226
Montpellier Curio Cabinet

Attach Top and Bottom with Sides

Parts required

A.	Top	1 pc	T.	Connecting Bolts	4 pcs
B.	Right Side Panel	1 pc	U.	Eccentric Cams	4 pcs
C.	Left Side Panel	1 pc	V.	Plastic Caps	4 pcs
D.	Bottom	1 pc	N.	Flat Head Screwdriver	1 pc

2. **Attach Connecting Bolts (T)** Insert the Connecting Bolts (T) into the pre-threaded holes in Top (A) and Bottom (D) and secure using Flat Head Screwdriver (N). See Illustration #2.
3. **Attach Top (A) & Bottom (D) to Side Panels (B,C)** Insert the Connecting Bolts (T) in the Top (A) and Bottom (D) into the pre-drilled holes in the Left Side Panel (C) and Right Side Panel (B). Be sure the dowels in the Left Side Panel (C) and Right Side Panel (B) align with the pre-drilled holes in the Top (A) and Bottom (D). Insert the Eccentric Cams (U) into the pre-drilled holes in the Left Side Panel (C) and Right Side Panel (B). **Note: Make sure the 'X' pattern faces out and the arrow of Eccentric Cams (U) point towards Connecting Bolts (T).** Use the Flat Head Screwdriver (N) to adjust the Eccentric Cams (U) and lock the Connecting Bolts (T) in place by turning in a clockwise direction. Cover the Eccentric Cams (U) with the Plastic Caps (V). See Illustration #2.

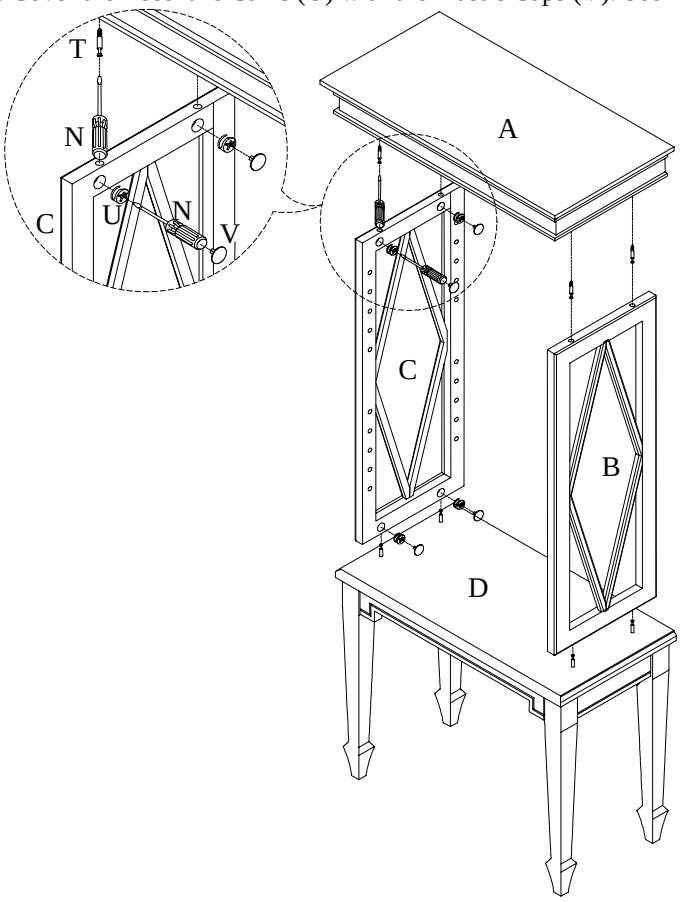

Illustration #2

1883226
Montpellier Curio Cabinet

Attach Back Panel

Parts required

A.	Top	1 pc	J.	Back Panel	1 pc
B.	Right Side Panel	1 pc	L.	Pan Head Screws	14 pcs
C.	Left Side Panel	1 pc	O.	Phillips Head Screwdriver	1 pc
D.	Bottom	1 pc			

4. **Attach Back Panel (J)** Place the Back Panel (J) into the notched edges of the Side Panels (B,C), Top (A), and Bottom (D). Secure in place with the Pan Head Screws (L) using the Phillips Head Screwdriver (O). See Illustration #3.

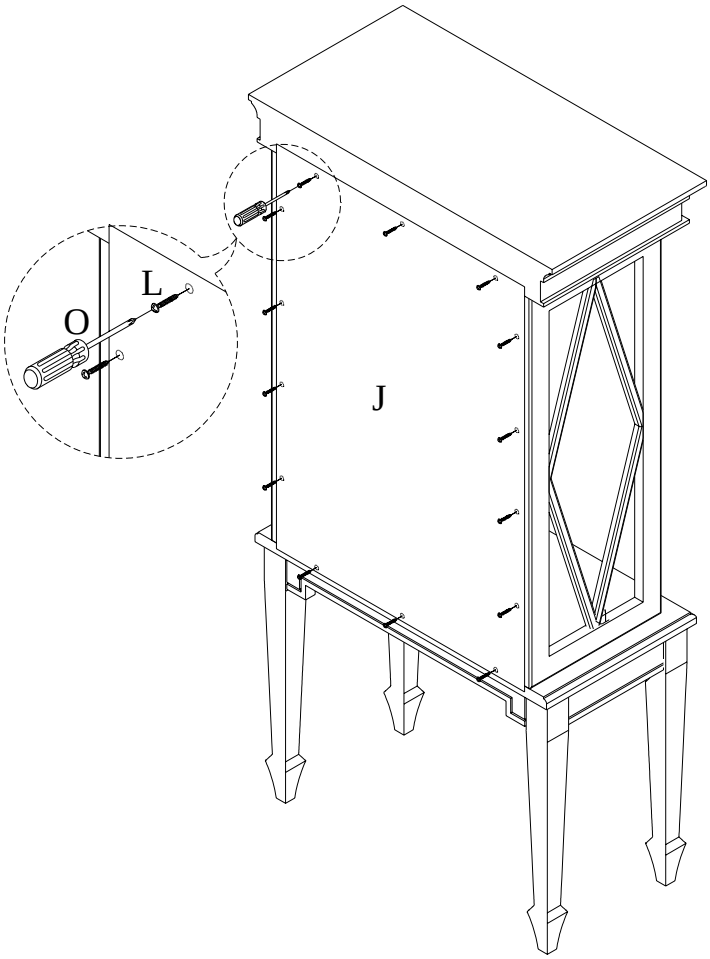

Illustration #3

1883226
Montpellier Curio Cabinet

Attach Doors

Parts required

B.	Right Side Panel	1 pc	M.	Flat Head Screws	8 pcs
C.	Left Side Panel	1 pc	O.	Phillips Head Screwdriver	1 pc
E.	Right Door	1 pc	G.	Tassels	2 pcs
F.	Left Door	1 pc			

5. **Attach Doors (E,F)** Align the pre-drilled holes in the Right, Left Doors (E,F) with holes in the hinges on the Right, Left Side Panels (B,C). Secure in place with the Flat Head Screws (M) using the Phillips Head Screwdiver (O). See Illustration #4.
6. **Hang Tassels (G)** Hang Tassels (G) on the door pulls. See Illustration #4.

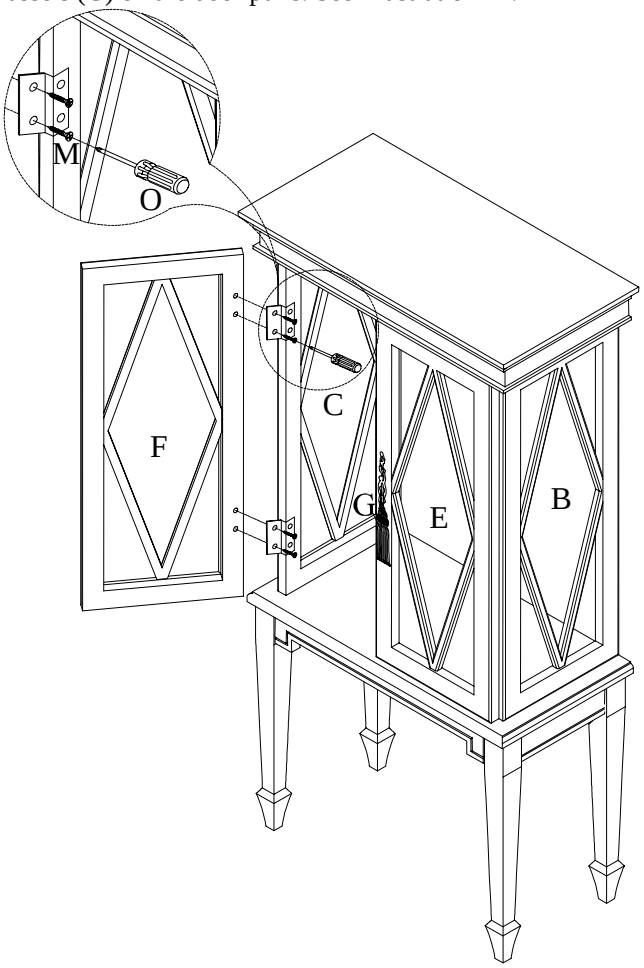

Illustration #4

1883226
Montpellier Curio Cabinet

Install Shelves

Parts required

B.	Right Side Panel	1 pc	H.	Shelves	2 pcs
C.	Left Side Panel	1 pc	I.	Shelf Supports	8 pcs

7. **Install Shelves (H)** Insert the Shelf Supports (I) into the pre-drilled holes, at the desired locations, in the Right Side Panel (B) and Left Side Panel (C). Place the Shelves (H) onto the Shelf Supports (I). See Illustration #5.

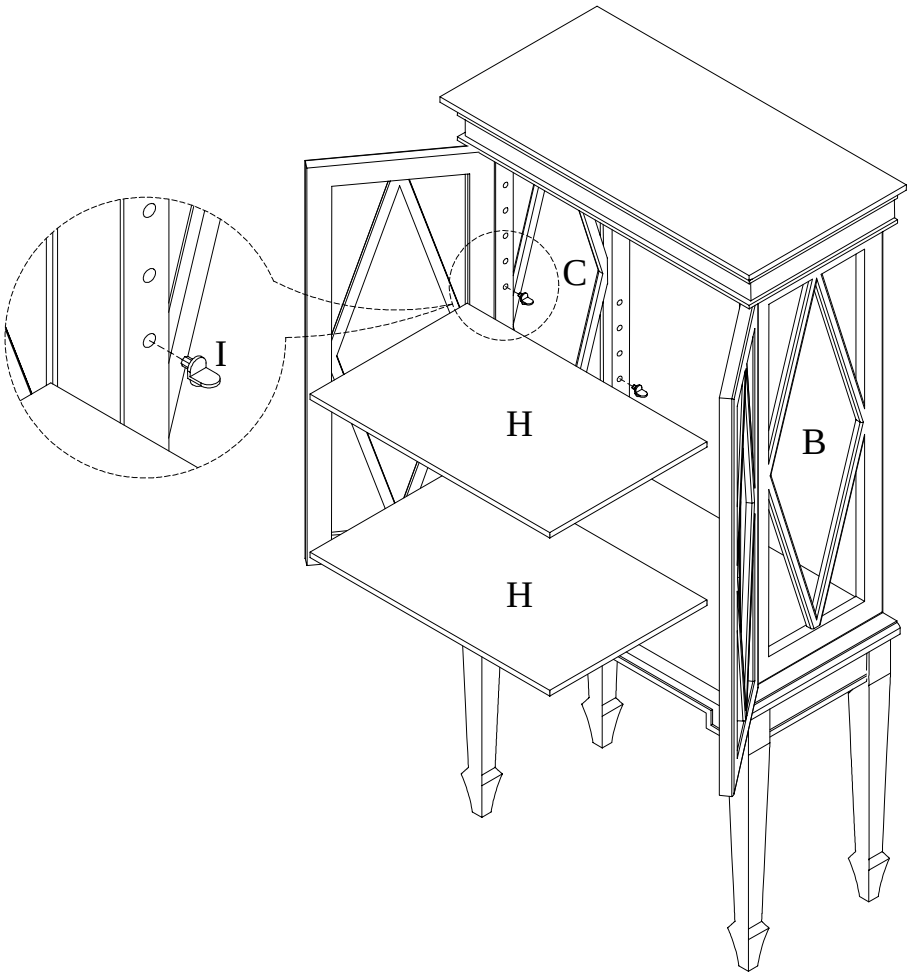

Illustration #5